AG-20 B-FRAME

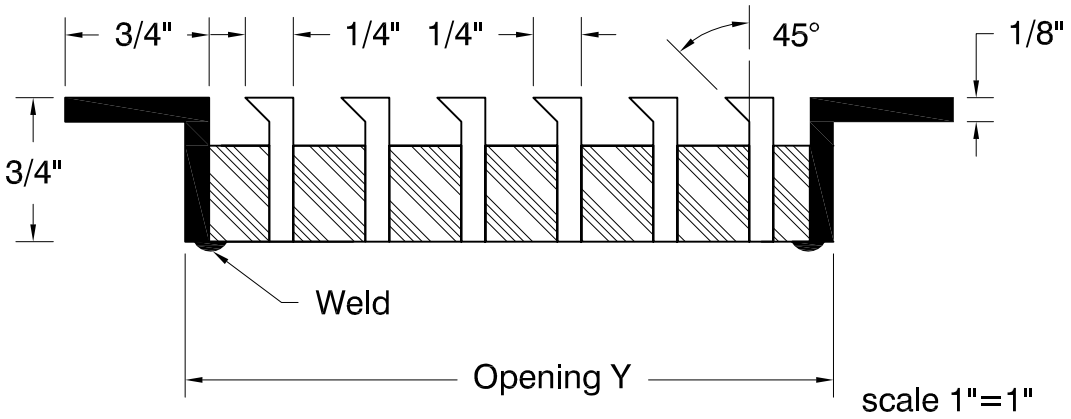

NTS

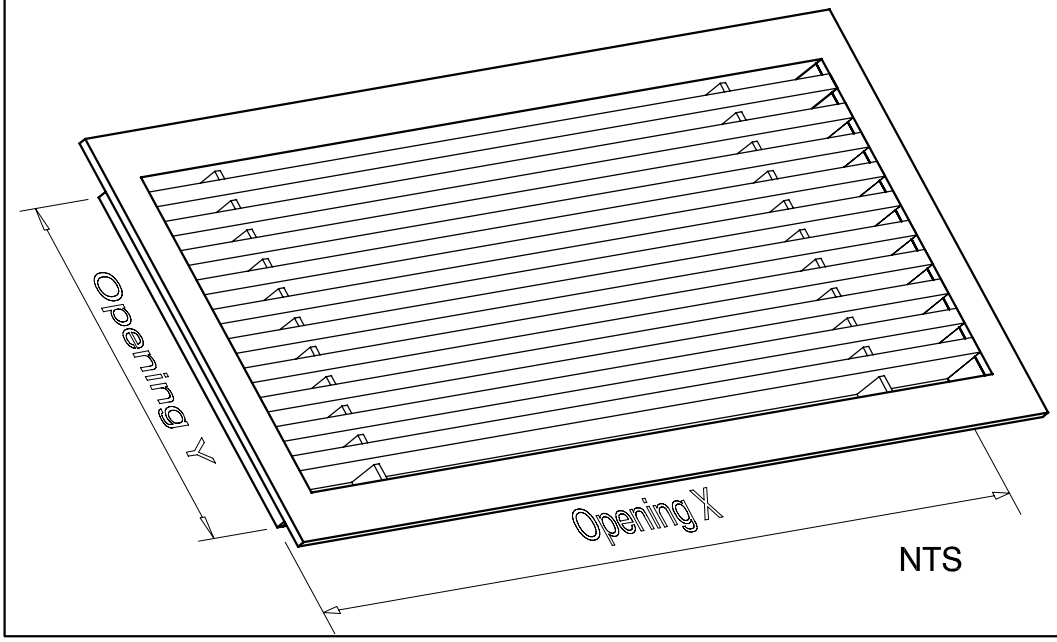

NTS

REQUIREMENTS

MATERIAL:

THICKNESS: 3/4" depth

FINISH:

MOUNTING: B-FRAME

	SIZES (Opening)	
QTY	X	Y

DATE	APROVED
-	

JOB #

QUOTE #

NOTE:

ARCHITECTURAL GRILLE

42 SECOND AVE
BROOKLYN, NY 11215
718-832-1200
FAX: 718-832-1390

CUSTOMER: