CATHEDRAL # 226

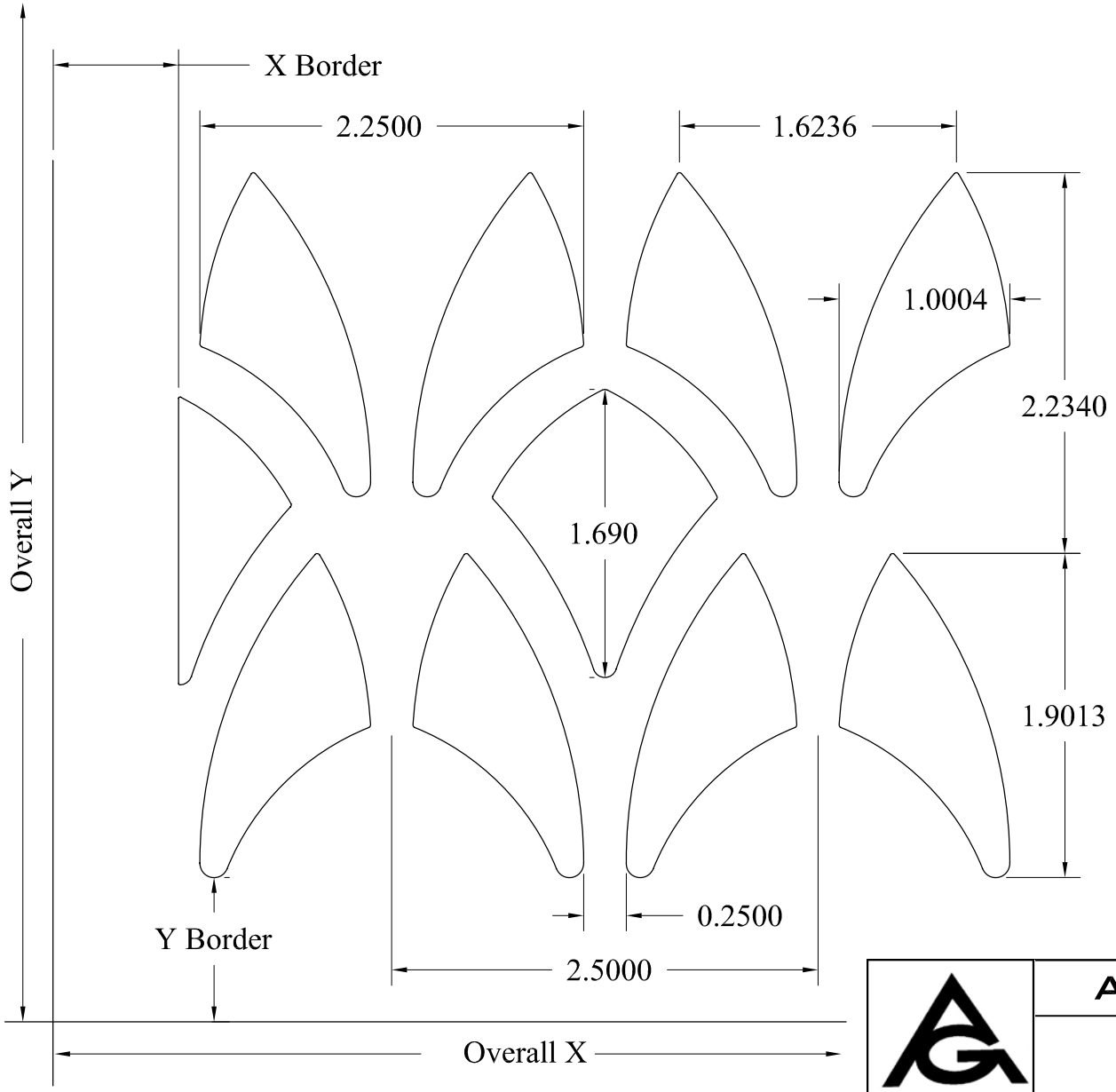

REQUIREMENTS

MATERIAL:

THICKNESS:

FINISH:

MOUNTING:

	SIZES (Overall)		BORDERS	
QTY	X	Y	X	Y

DATE	APPROVED
–	....

JOB #

QUOTE #

ARCHITECTURAL GRILLE

42 SECOND AVENUE
BROOKLYN, NY 11215

CUSTOMER	SIZE	REV
	A	–

DESCRIPTION	SCALE	SHEET
CATHEDRAL # 226 2 3/4"x2 3/16"	1"=1"	1 of 1